| REVISIONS | | | |
|---|---|---|---|
| REV | DESCRIPTION | DATE | APPROVED |
| | | | |

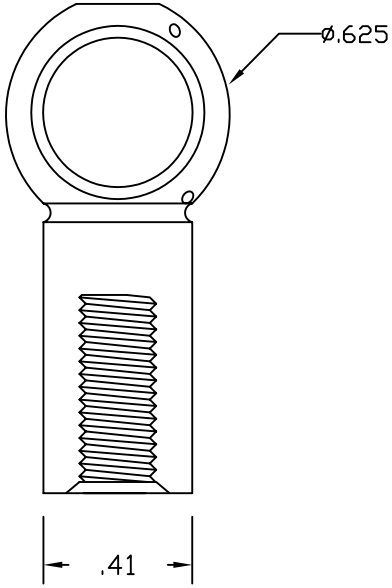


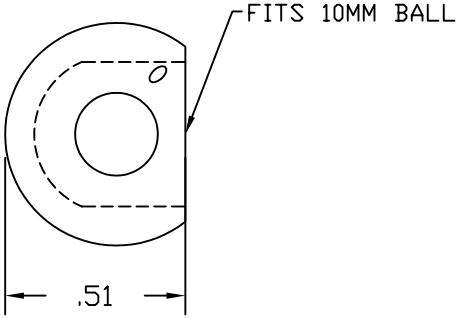


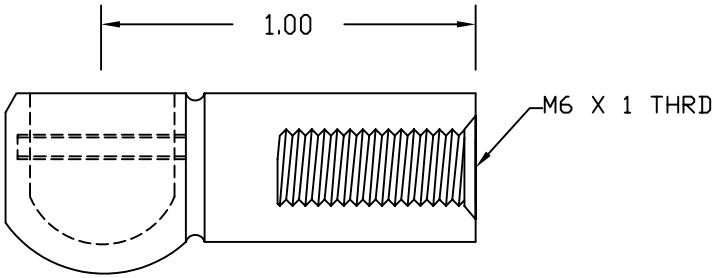


5. ALL DIAMETERS CONCENTRIC WITHIN .005 T.I.R.

4. MAX SURFACE FINISH: 63 Ra.

3. BREAK ALL EDGES: .010 MAX.

2. MATERIAL: 303 STAINLESS STEEL

1. WORKMANSHIP PER AMERITOOL STANDARD

NOTES: UNLESS OTHERWISE SPECIDIED

CAD GENERATED DRAWING,
DO NOT MANUALLY UPDATE

DO NOT SCALE PRINT
UNLESS OTHERWISE SPECIFIED
DIMENSIONS ARE IN INCHES
REMOVE ALL BURRS
INTERPRET DIM AND TOL PER ASME Y14.5M - 1994
LIMITS ON FINISHED DIMENSIONS:
TOL ON ANGLE: 2° 2PL: .015 3PL: .010

NOTICE: THE INFORMATION CONTAINED IN THIS DRAWING IS PROPRIETARY TO AMERITOOL AND SHALL NOT BE DISCLOSED IN WHOLE OR IN PART, OR USED FOR ANY DESIGNOR MANUFACTURE, EXCEPT WHEN SUCH USER POSSESSED DIRECT WRITTEN AUTHORIZATION FROM AMERITOOL.

| | | |
|---|---|---|
| APPROVED | D. CASWELL | 1/6/2012 |
| CHECKED | R. PRICE | 1/6/2012 |
| DRAWN | D. CASWELL | 1/6/2012 |

MATERIAL

SEE NOTE 2

AMERITOOL
MFG INC.

AMERITOOL MFG INC
64 CORPORATE PARK DRIVE
CENTRAL SQUARE, NY 13036
PHONE: (315) 668-2172

STAINLESS STEEL 10MM BALL SOCKET

| SIZE | CAGE CODE | PART NO |
|---|---|---|
| A | 6JGQ3 | EFSS-10M |

SCALE: 1:1 | WEIGHT: | SHEET 1 OF 1

CAD FILE: EFSS-10M.DWG